DESIGNING AND BUILDING A TRANSPLANTING MACHINE FOR SEEDLINGS GROWN IN NUTRITIVE PLANT POTS

V. CRĂCIUN, Ov. BALAN
Technical University"Gh.Asachi" Iasi, Faculty of Mechanics, Department of Machinery for AGRICULTURE and Food Industry;

***Abstract**: In this paper are analysed agro-technical specifications and methods for crop establishment of different sorts of vegetables by transplanting vegetable seedlings grown in vegetable plant pots. In Romania, the actually methods for manually and mechanically transplanting of seedlings with empty roots, cause the retardation of the plants growth process, because of bending the roots upward and other phenomena. The appropriate development to increase the labor capacity and to facilitate the plants growth, without retardation because the transplanting process, is to grow seedlings in nourishing pots under artificial climate and using semiautomatic transplanting machines for transplanting seedlings in field. Machine specifications are: to transplant 60 to 80 seedlings in one row in a minute; minimum inter-row distance is about 30 cm; spacing between plants on row can be adjusted by the transmission ratio between a ground contact wheel and the horizontal rotating feeder with 6 to 12 bowls with opening bottoms. The machine consists from one or more sections, fitted on a frame; each section could be considered a machine itself; the machine is rear mounted on tractor. Such technologies and machines increase the labor productivity, make easier labor for the workers and gives earlier yields up to 10 till 20 days.*

***Kay words:** vegetables, seedlings, nourishing pots, transplant, machine, design.*

1. INTRODUCTION

Manual transplanting of seedlings needs a considerable time and labor expenditure (about 6 pieces per minute) and is extremely tiring. Today, in ROMANIA, the most part of vegetable cultivation is made on small sized surfaces and transplanting of the seedlings are done manually.

Mechanized transplanting increase the labor capacity; during a single minute about 35…45 seedlings can be mechanically planted in one individual row, that is 5…6 times more than by manual transplanting [Bernacki, 1972]. For the mechanisation of the transplanting process, in Romania are used machines from the series MPR-5(6, 8) and very few imported machines (John Deere, Super Prefer, Piccard).

In the most part, the transplanting machines are designed as semiautomatic, due to the fact that the transplanting devices of the machine are fed with seedlings by a human operator. It follows from the above that the speed and productivity of a transplanting machine depends on the ability of the operators which feed the grabs on the transplanting disk. Experimental researches [Bernacki, 1972;

Bumacov, 1997, Balan, 1998] emphasized that, in the field, the frequency of feeding is 35…45 seedlings per minute; it means a time to transplant a seedling of about (1,71…1,33) seconds for each plant From the above it is clear that the operational speed of the transplanting machine depends on the reflexes of the operators which inserts seedlings into the grabs (or between the disks) and for this reason the aggregate (tractor and mounted machine) speed is relatively small (0,5…1,2) km/h.

Undoubtedly, mechanized transplanting has many advantages over manual transplanting of seedlings, but they have and some disadvantages, namely:

-many seedlings are fixed in the soil with a deviation to the vertical;

-the roots of the seedlings are naked, without soil, due to this fact, the seedlings suffer demage when they a fixed into the machine grabs;

-the seedlings are withering since they a picked up from the hotbed till they are enclosed into the humid soil mass and suffer few days of retardation till they are taking roots (the vegetation is starting up again).

To avoid the disadvantages shown above, a modern trend, which is rapidly spreading is to use seedlings grown into nourishing pots and transplant them in the field using new designed semiautomatic machines. The technologies of growing seedlings into nourishing pots and new semiautomatic transplanting machines gives far better qualitative indices than old technologies and machines [Bumacov, Balan, Chechi& Magli, REGERO SA, FEDELE], increase labor productivity, make easier labor for the workers and gives earlier yields up to 10 till 20 days.

Laboratory and field tests which have made with the purpose to increase the labor productivity, the speed of the machines and to improve the working conditions for the operators, pointed out that there are two major directions to achieve these goals, namely:

a. To improve technologies for growing seedlings by growing them in nourishing pots under a protected climate;

b. To improve technological schemes of the semiautomatic transplanting machines for use the seedlings grown into nourishing pots [Bumacov V.& Rosca V.,1995; Bumacov V, 1997; Hung, B.K,.1973; Moden Walter L. at all.,1976, Balan O.,1998, Chechi&Magli, Fedele, REGERO S.A.,SIMA, PARIS, 2003];

The concept is that the seedling with its nourishing pot must drop into the open furrow in a vertical position and than the packing wheels will cover the roots of the seedlings with soil at the desired compression.

In the case of the machine for transplanting seedlings grown into nourishing pots [1,5,6,7,8} there are some important peculiarities. The operator makes only two simple operations, namely: **a**. ***to take the seedling from the container 9, fig.1 and; b. put the seedling in a normal position into the cups 7, of the cartridge6***. Because of these facts the conditions for feeding the cartridge are far easier than to put seedlings into the grabs of the transplanting disk. That is why the frequency of feed increases till and over 80 seedlings per minute.

Theoretical considerations

To keep constant the spacing of plants on row, independent of the machine speed, all the mechanisms on the machine which command the metering system are driven by the driving wheel 3, which permanently is in contact with the soil.

To demonstrate the principle of functioning for the new machine for transplanting seedlings in nourishing pots we use, as the sample, the Romanian machine for transplanting seedlings equipped a device, EPC4, for transplanting germinated potatoes for the extra-early harvests (Transplanting Equipment for Germinated Potatoes- TEGP), Fig.1.The only mission for the operator, seated on the section seat 10, is to get the germination potatoes from the flat 6 and put them into revolving cartridge 6, fitted with magazine cells 7. The cells 7 has open bottoms, release potatoes in a tub 5 wich directed them in the furrow, opened by the opener 4 and potatoes are covered with soil over the roots at the desired compression by the disk coverers 11.

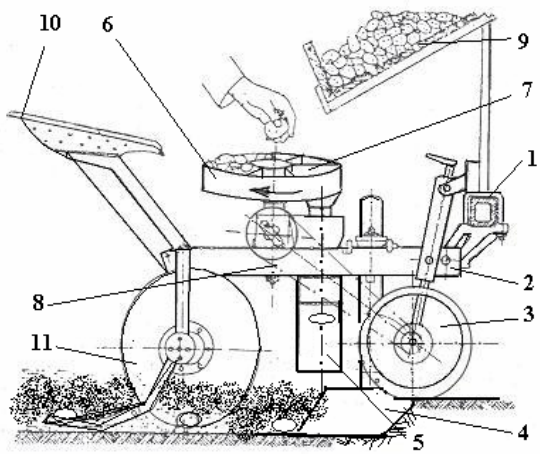

Fig.1. Semiautomatic transplanting machine for pre-germinated potatoes (transformed for transplanting seedlings grown in nourishing pots): 1. Machine frame, 2. section frame,3. depth control and transmission wheel, 4. furrow opener, 5. plant tube, 6. distributor (mettering device), 7. Cells (cups) with open ends, 8. Transmission for distributor, 9. platform for tubercules or for seedlings trays, 10. operator's seat, 11. disks coverers or compacting wheels (for transplanting seedlings)

Experimental researches stated that the time for feed a cup in the cartridge is:

$$t_{\min.\min} = \frac{60(\sec onds/\min ute)}{35...45(seedlings/\min ute)} = (1.71 \div 1.33)\sec/seedling \qquad (1)$$

The author V. Bumacov (1997), proved that the time of the drop for seedlings with nourishing pots from the cups to the furrow, differ very few in comparison with the free drop through the tub (7); For a heighth of the metering device H=(0÷4) m, we find that the dropping time differ very few in comparison with the free drop, which is, ($t_{droping}$= (0.285÷0.35) secondssmaller than $\boldsymbol{t_{min.min}}$ ***=0,75÷1 sec*** in which the operator feed the cartridge or the grabs of the transplanting disk. Consequently, having better conditions for work, such the one in the Fig.1, the operator could fed the metering device (distributor disk) with 60...80 pieces/min .

DESIGN OF THE TRANSMISSION FOR THE METTERING DEVICE

Concerning the disposal of seedlings on land, namely: density, distance of plants on row, inter-row distance, for each culture we could have have a maximum respectively a minimum density on hectare, N_{max} and N_{min} (plants/ha)., fig.2 (such sketches exist for every vegetable).

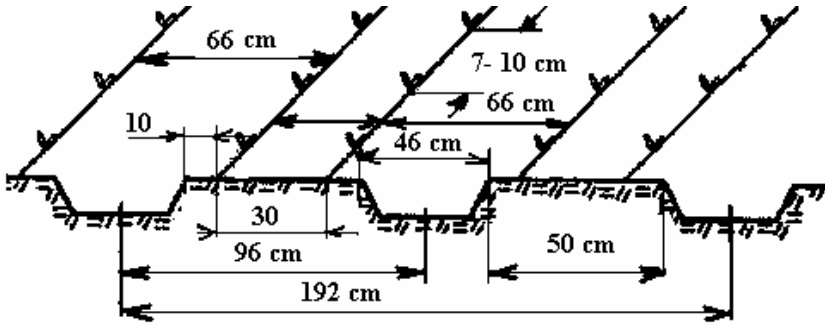

Fig.2. *Sketch for establishing an onion culture on land, by transplanting bulbs or seedlings grown in nutritive pots.*

Density of plants on hectare, in order to offer the optimum space for the plants growing, is given by the mathematical relation (2) [9]:

$$N = \frac{10^8}{a \cdot b} \quad \text{(plants/ha)}, \qquad (2)$$

where***: a,*** is the distance of seedlings on row, (10…150) cm ***; b***, is the spacing between rows, (30…140) cm.Taking into consideration the relation (2), results :

$$a = \frac{10^8}{b \cdot N} \text{ (cm)} \qquad (3)$$

To achieve this distance among plants on row, we must have the transmission ratio from the transmission wheel 3 and the distributor 6 (Fig.1), given by the relation:

$$i_t = \frac{\pi \cdot D}{a} \qquad (4)$$

where: D (cm), is the diameter of the transmission wheel 3, which is permanently in contact with soil, and is a free wheel (has no slippage) (Fig.1) ;

The total transmission ratio $\boldsymbol{i_t}$ consists from the product of the chain transmission 8, $\boldsymbol{i_{ch}}$ and the number of cells 7, ***m*** , on the distributor disk 6 (Fig.1), namely;

$$i_t = i_{ch} \cdot m \qquad (5)$$

We imposed a number of fifteen ratios which are obtained from five transmission ratio realized by the chain transmission 8, Fig.1 and three transmission ratio realized by the different distribution disks 6, Fig.1(each distribution disk having a different number of cups, the number of cups being a transmission ratio). Taking in to consideration the minimum and maximum density of the plants per hectare, table 1, according with different technologies of transplanting (Fig. 2), results the distances among plants on row; minimum 7…

10 cm for onion and garlic, respectively 50…60 cm for water melons and melons.

Assuming the rules given by Scripnic V. at al. [9], to design the transmission ratios for the distributing devices of sowing and transplanting machines, the authors designed the transmission, which consists from the transmission among the driving wheel 3 and the axle of the metering device 6 and the number of the distributor disks 6, Fig.1.

RESULTS AND DISCUSSIONS

Machine specifications are: to transplant 60 to 80 seedlings in one row in a minute; minimum inter-row distance is about 30 cm; spacing between plants on row can be adjusted by the transmission ratio between a ground contact wheel 3, Fig.1 and the horizontal rotating feeder with 6 to 12 bowls with opening bottoms, and by the inter- row spacings , imposed by the agro- technical specifications on the land conditions.

Table.1.

Table for setting up the transmission for the designed machine for transplanting in field seedlings grown in nourishing plants pots (sample)

Crop	Density (plants/ha)		Distance between rows cm)	Distance between plants on row (cm)		Total ratio, i_t
	Recommended	Obtained		recommended	Obtained	
Water melon	12000…14000	11284 14088 16926	140	50…60	63,3 50,7 42,2	2,973 3,716 4,46
Cabbage	45000…50000	41666 52083	80	25…27	30 24	6,285 7,857
Broccoli	36000…53000	31250 41666 52083	80	26…39	40 30 24	4,71 6,285 7,857
Papers	66000…84000	55555 66666 70175 95239	70…80	17…25	24 20 19 14	7,857 9,43 9,952 13,27
Tomatoes	55000…100000	55555 74074 92592 111111	40…50	15…25	40 30 24 20	4,71 6,285 7,857 9,43
Onion from seedlings	200000…300000	238095 303030 333333 350877	30	7…10	14 11 10 9,5	13,27 16,587 18,86 19,9

The machine consists from one or more sections, fitted on a frame; each section could be considered a machine itself; the machine is rear mounted on tractor. Such technologies and machines increase the work productivity, are making easier conditions of work for the operators and gives earlier yields up to 10 till 20 days.

For the moment, the theoretical calculus for the performances of the designed machine, for transplanting machine, using seedlings grown in nourishing pots are shown in the table No.1.For demonstration a presented only the vegetables with minimum and maximum density of the plants on hectare.namely :water melons, cabbage, onion and garlic.

4. CONCLUSIONS

Seedlings grown into nourishing pots proved to be a workable system for vegetable growing. This system of growing seedlings brings some major advantages in comparison to the old one systems, namely:

-The seedlings grown into the nourishing pots have a much grater mechanical and biological resistance; they don't suffer till 10 days since they a taken from their hotbed and till they a transplanted in the field. Once introduced into the soil they are taking roots quite immediately, the growing is continuous and the yield appears till two weeks earlier than the old system of transpalanting;

-Seedlings grown into the nourishing pots are more suitable for mechanized transplanting, using machines such the one presented in fig.1.

-The authors consider that the designed machine could meet the interest of agricultural machines manufacturers and of the vegetable producers too.

REFERENCES

1. **Balan, O.** *Contributii privind procesul de lucru la masinile de plantat rasaduri.* Teza de doctorat, 1998, Universitatea Tehnica IASI.
2. **Bernacki H.at all.** *Agricultural Machines, Theory and Construction; 1972,* vol.I, NTIS, U.S. Department of Commerce, Springfield, Va., USA.
3. **Bumacov, V., Rosca, V.** *Masina semiautomata de plantat rasaduri.* Brevet de inventie, BOPA, nr.6; 1995; Republica Moldova.
4. **Bumacov, V.***Bazele teoretice ale Elaborarii Masinilor si Perfectionarea Tehnologiilor de Semanare si Plantare a Culturilor Agricole.* Teza de doctorat pentru Doctor habilitat in Stiinte Tehnice. Chisinau, Republica Moldova, 1997.
5. **Bumacov, V., Rosca, V.** *Aspectele Tehnologiilor Moderne de Crestere a Rasadului*. UASM, Chisinau, 1995, vol.3., pag.105…108.
6. **Buzea, I; Moteanu, F. 1987.** *Sowing and Transplanting Machines*. Ed. CERES, Bucureasti, Romania.
7. **Hung, B.K.** *Systems* Engineering at Precision Automatic Transplanting. 1973, Transactions of the ASAE, paper nr 73.
8. **Moden L.Walter, et all**. *A Machanically Containerized Seedling Transplanter; 1977*, Transactions of the ASAE, vol.20.,no.1, 38…40.
9. **Scripnic ,V.; Babiciu, P. 1979**. *Agricultural Machines (Masini Agricole, Romanian Language) ; pag. 156… 210.* Editura Ceres, 1979. Bucuresti, Romania.
10. **Chechi& Magli. 2003**. *Commercial Advertisinig* . SIMA, PARIS. Bologna, Italy.
11. **FEDELE. 2003**. *Commercial Advertisinig . SIMA*, PARIS. 66034, Lanciano/CH, Italy.
12. **REGERO SA . 2003**. *Commercial Advertisinig . SIMA, PARIS. 16 rue' d' Allemagne,* 44334, Nantes Cedex 3, France, fax (33) 02 40 93 06 85.